VELUX modular skylights

Sub-construction for Atrium Longlight

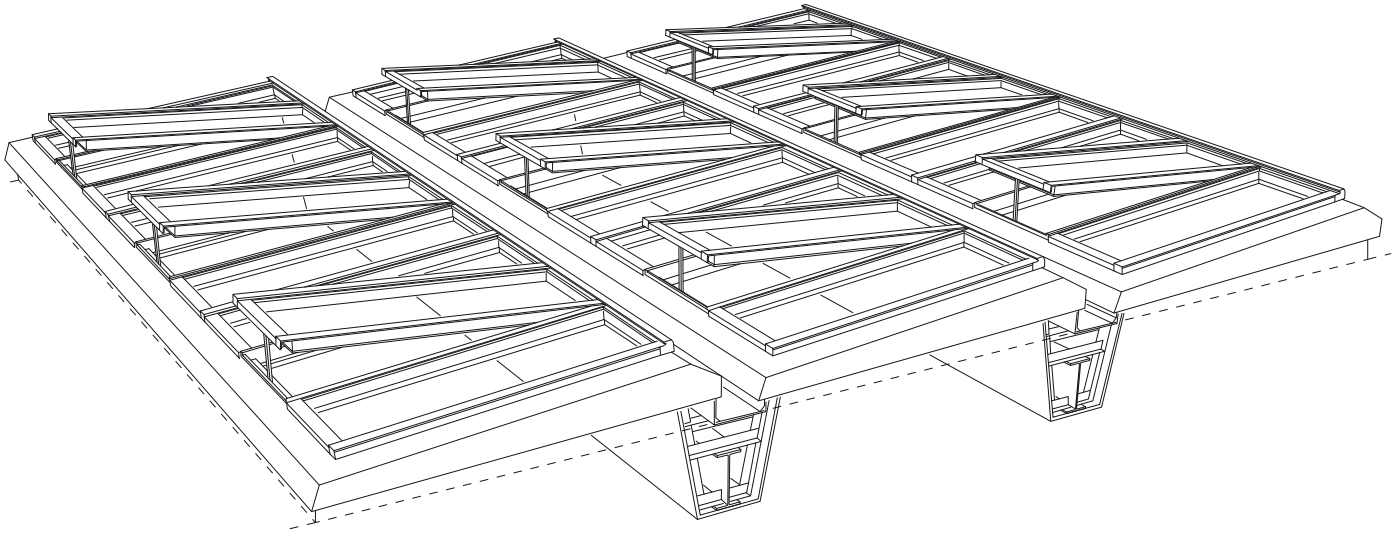

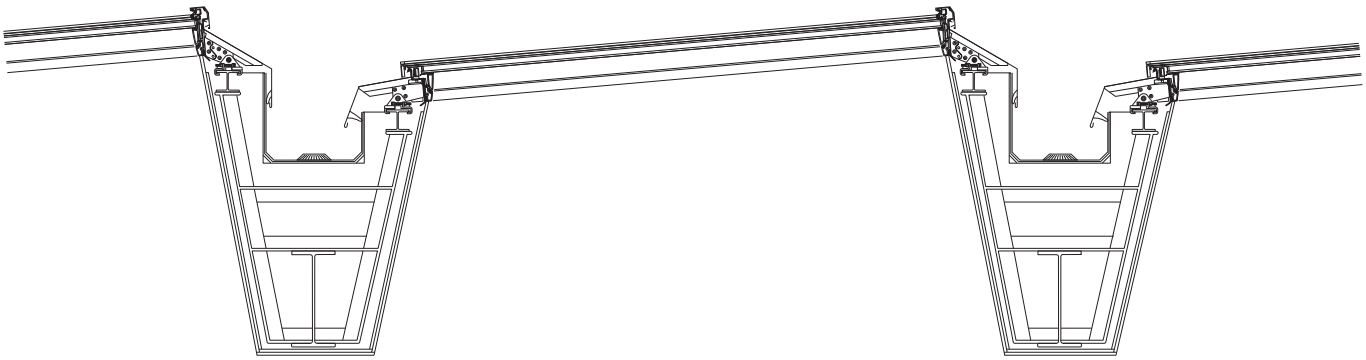

Sub-construction for atrium Longlight at 5-25° pitch

VELUX modular skylights in an atrium longlight solution can be installed on a sub-construction made of steel, wood or concrete finished with a steel profile. The sub-construction raises the modules above the roof surface, protecting the construction against water and drifting snow, and provides the supporting base for the modular skylights.

The sub-construction is not included in the VELUX delivery. The sub-construction as shown in the drawing only represents general principles and must be designed and dimensioned to fit the specific building project, local architectural style and practice, and the directions of other building suppliers.

Axonometric

A: Opening width
B: Opening lenght
C: Sub-construction width
D: Sub-construction length
O: Difference in height of sub-construction
Minimum length of steel profiles is equal to opening length (B)

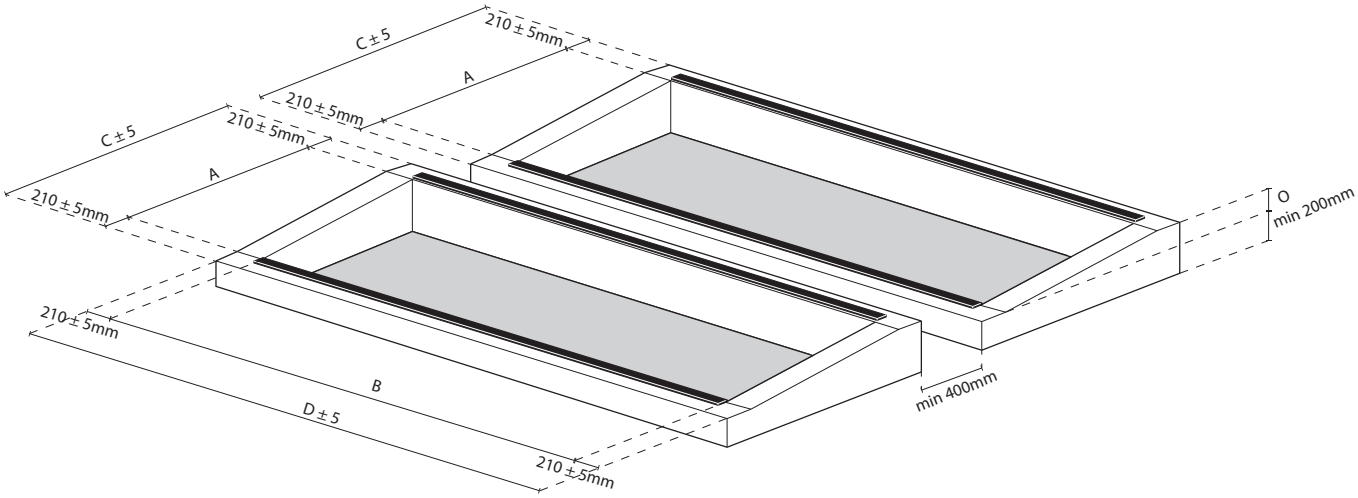

Sub-construction for Atrium Longlight

A: Opening width
B: Opening lenght
C: Sub-construction width

D: Sub-construction length
O: Difference in height of sub-construction
Minimum length of steel profiles is equal to opening length (B)

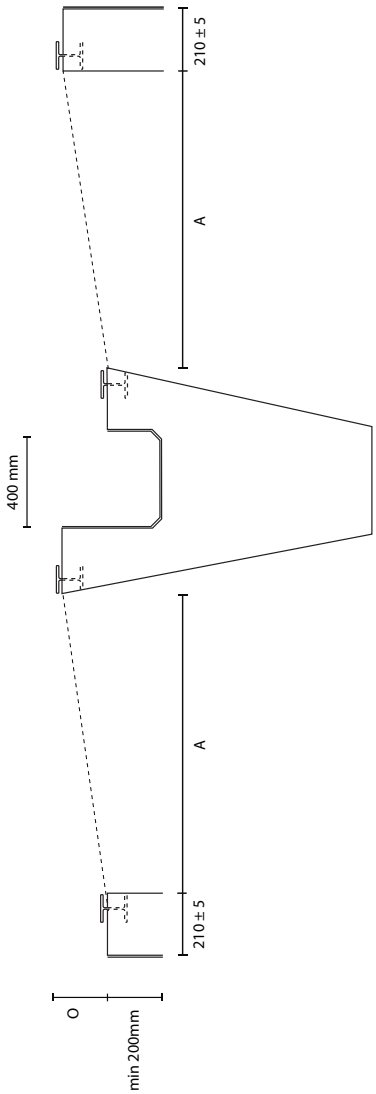

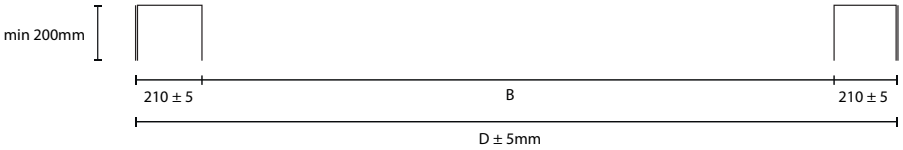

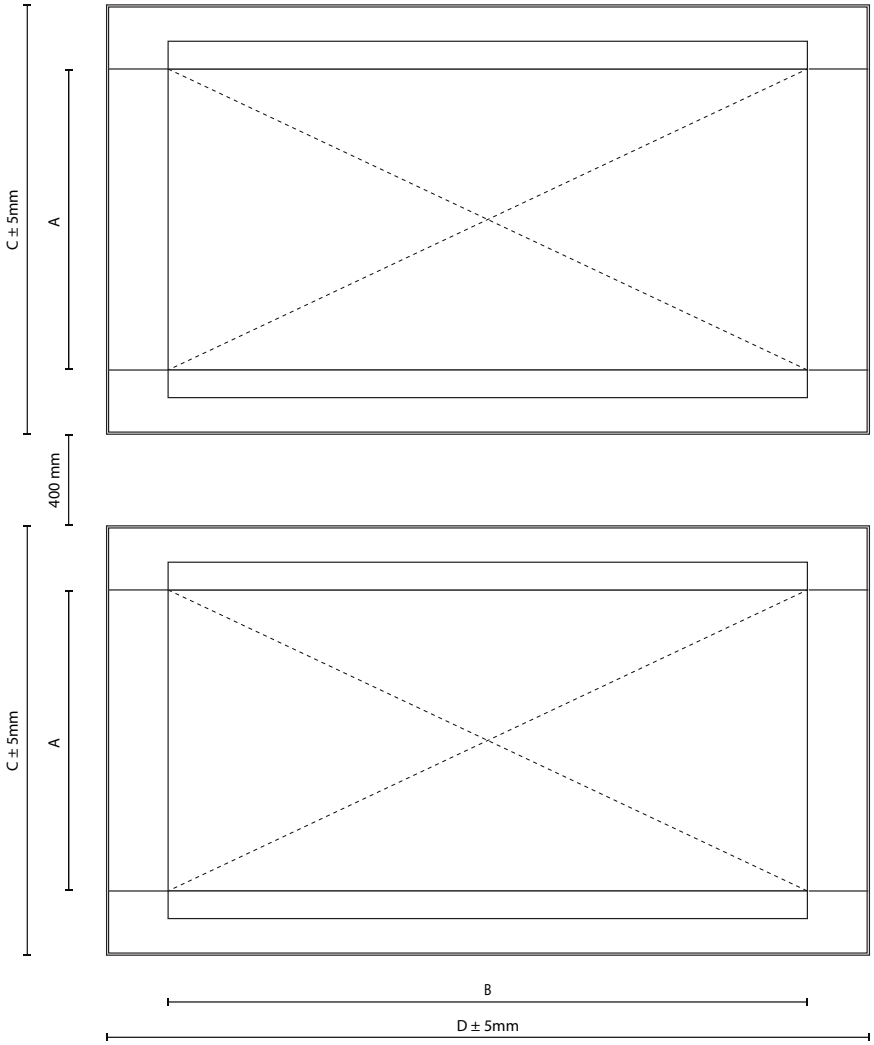

Connecting to the roof

The surface on which roofing felt is laid must be prepared according to applicable standards for roofing materials and best building practice.

The roofing felt must be applied to the outside of the sub-construction before mounting the skylight modules.

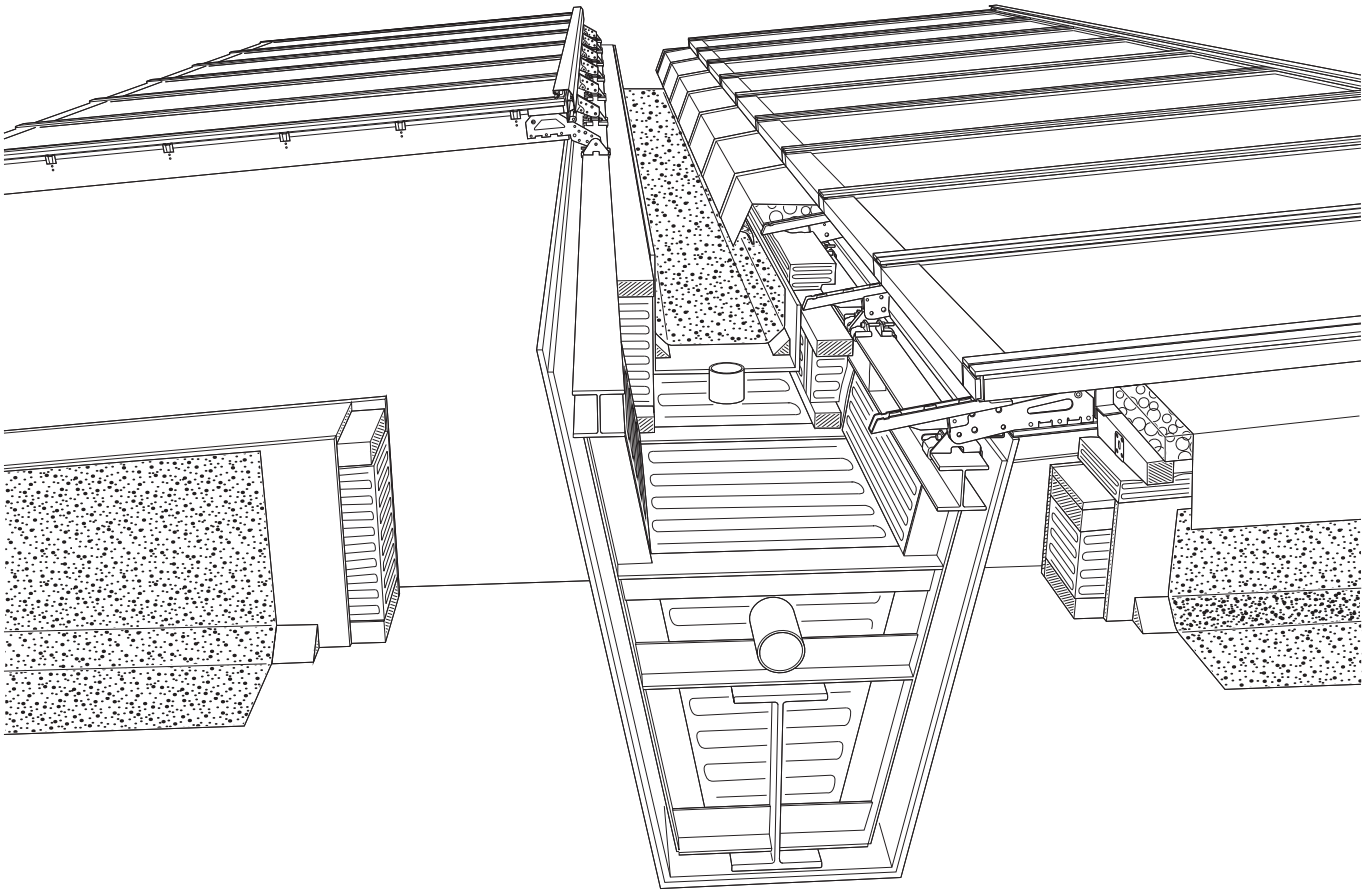

Sub-construction dimensioning requirements

The roof construction is subject to deflection after installation of the skylight modules. These deflections include subsequent roof covering, various building installations and external loads such as snow and wind etc. The sub-construction must be designed to withstand all these loads and the deflections must be limited to to maximum 1/400 x the full length of the sub-construction both vertically and horizontally.

After completing the sub-construction, it must be secured against water penetrating the roof construction and insulation.

For load capacity and weight of the skylight modules, please contact your local modular skylight supplier.

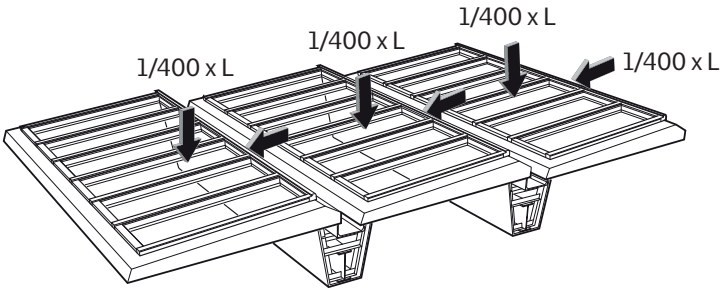

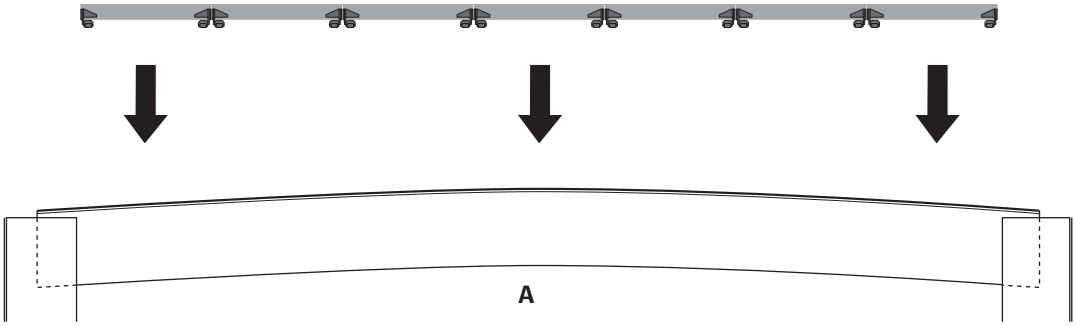

A: Beams can be constructed with a camber height to withstand the weight from the modules

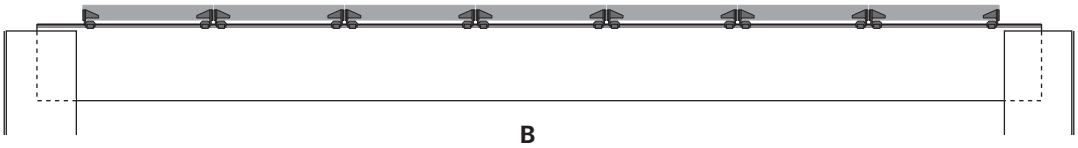

B: After the installation the beams are flat level

Sub-construction variants

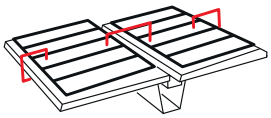

Cross section

Options of sub-constructions for longlight solutions. Please note that the width stated indicates the distance from the finished exterior of the roofing material to the interior of the wood/steel profile.

Steel sub-construction
For installation on steel profile

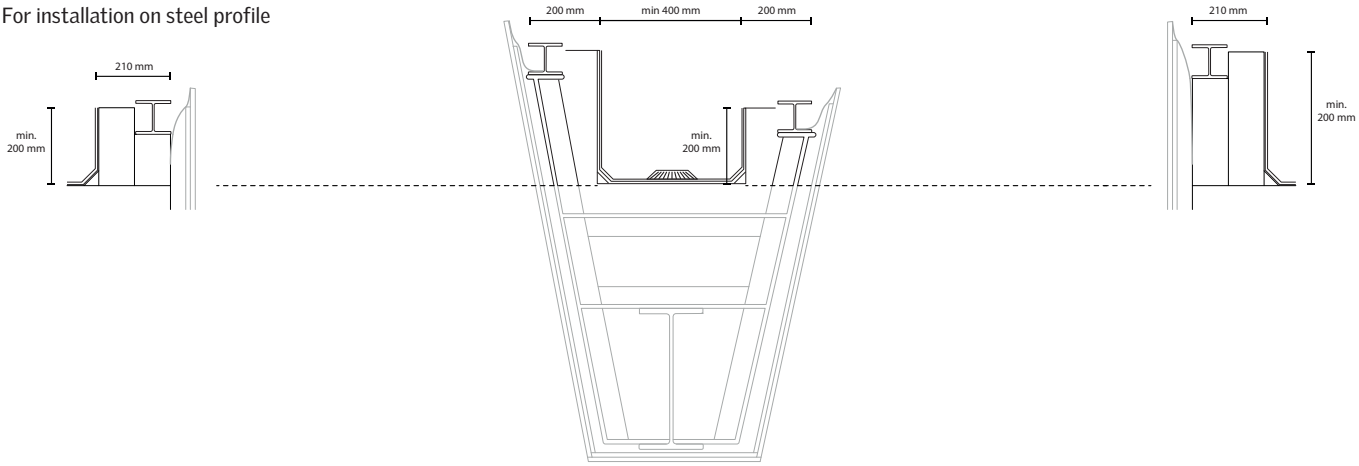

Wood sub-construction
For installation on steel flat bar

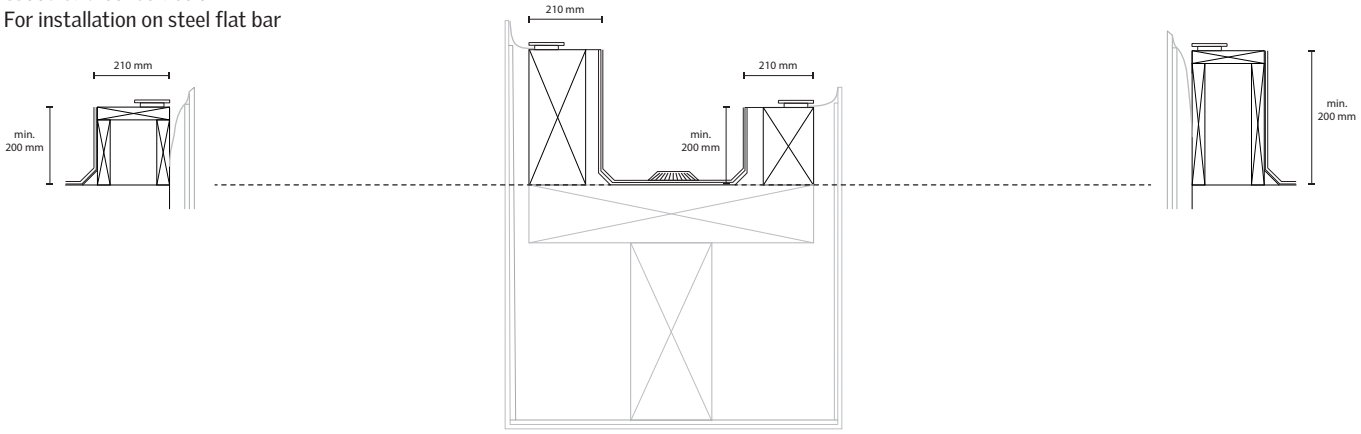

Concreete sub-construction
For installation on stel flat bar

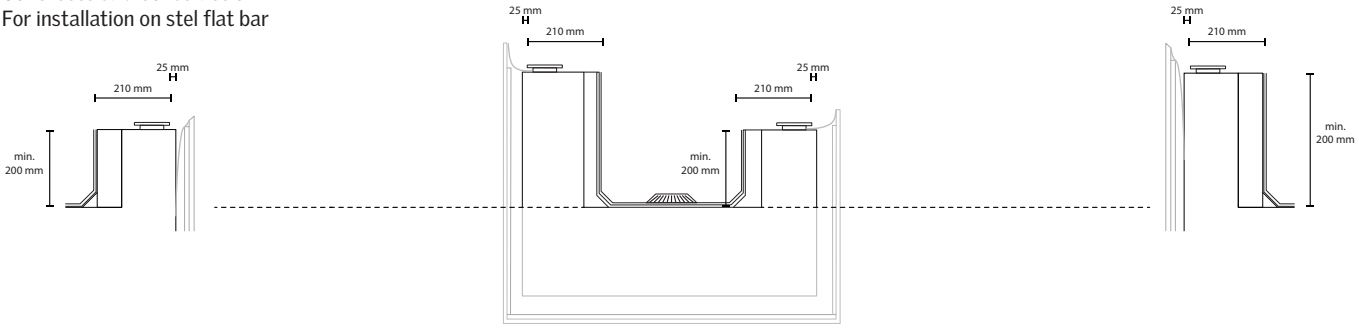

Sub-construction for Atrium Longlight

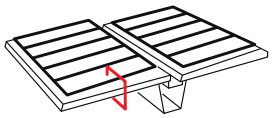

Longitudinal section

In the gable construction for atrium longlight at 5-25° pitch, the distance from the fnished exterior of the roofing material to the interior of the wood/steel/concrete sub-construction must be 210 mm.

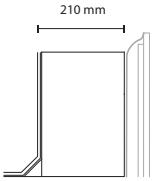

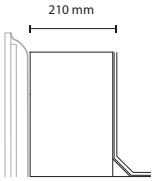

Securing modular skylights to the sub-construction

Using steel profile

The sub-construction can be finished at the top with steel profile or steel flat bar, which provides a level and stable surface for the skylight modules and forms a base for fitting installation brackets with clamps.

The number and size of fixings for securing the steel profile to the sub-construction must be dimensioned by others to fit each project.

The following standard steel profiles are suited for installation of VELUX modular skylights in atrium longlight solutions:

EU steel beams:
INP 220
IPE 200
HE100A
HE100B

British steel beams:
UB 178 x 102 x 19
UB 203 x 102 x 23
UB 254 x 102 x 22
UB 254 x 102 x 25
UB 305 x 102 x 25
UB 305 x 102 x 28
UB 305 x 102 x 33

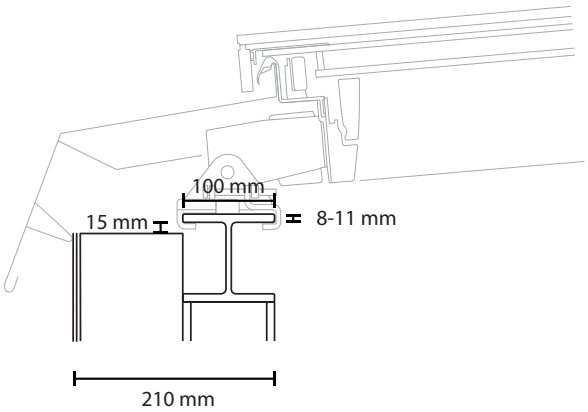

Wood or steel sub-construction with steel profile

In case a stronger sub-construction is needed, the steel profile can be replaced with a stronger profile. In this case, a different size installation bolt must be ordered separately from VELUX Company Ltd. The following profiles can be used:

EU steel beams:
INP 240, 260, 280
IPE 220, 240
HE120A
HE120B

British steel beams:
UB 305 x 127 x 37
UB 305 x 127 x 42
UB 356 x 127 x 33

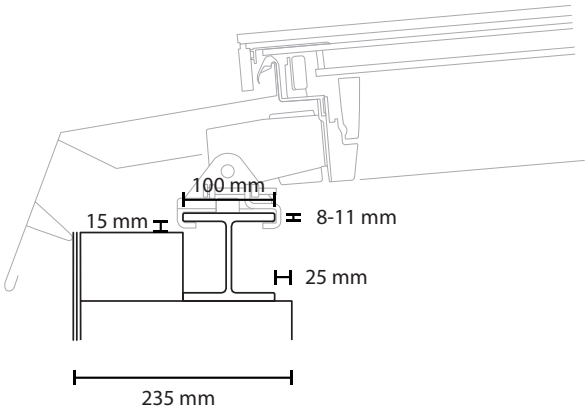

Concrete sub-construction with steel profile

Sub-construction for Atrium Longlight

Straightness of steel profile

Requirements to the straightness of the steel profile is maximum 2 mm over any given 2 meters.

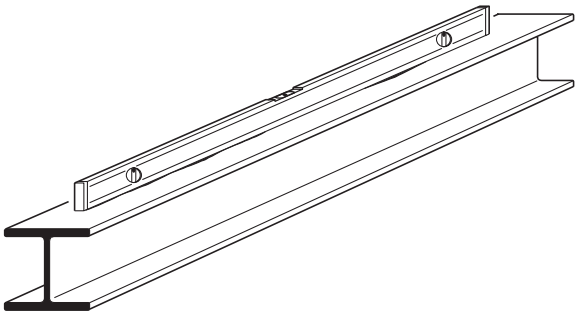

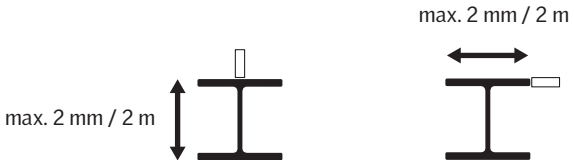

Using steel flat bar

When mounting the modular skylights on a steel flat bar, the steel must be 100 mm wide and 8-11 mm thick. In addition there must be at least 15 mm free space underneath the steel both vertically and horizontally to allow room for the clamps.

The number and size of fixings for securing the steel profile to the sub-construction must be dimensioned by others to fit each project.

Requirements to a steel flat bar:

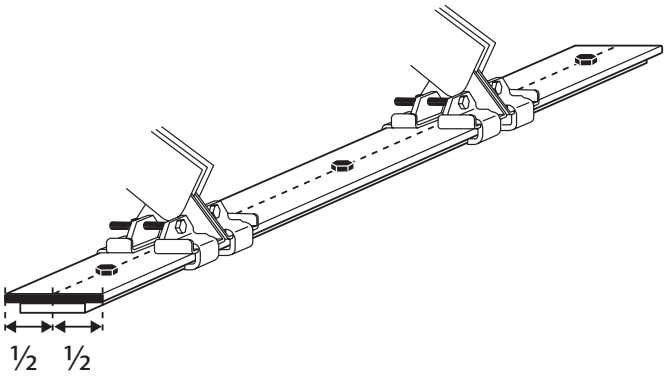

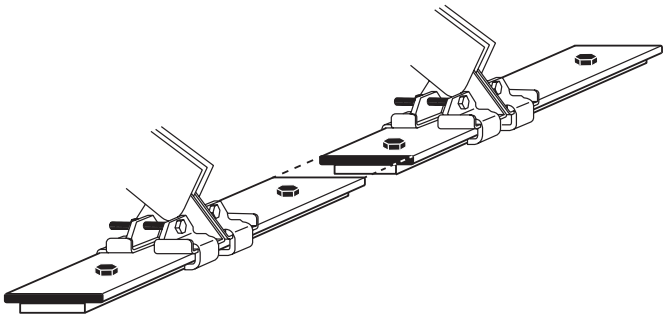

- The blocking-up of the steel must be in the full length of the steel flat bar
- The steel can be secured using screws or bolts along the middle of the profile

- Connection of steel profiles must not collide with clamps

Sub-construction for Atrium Longlight

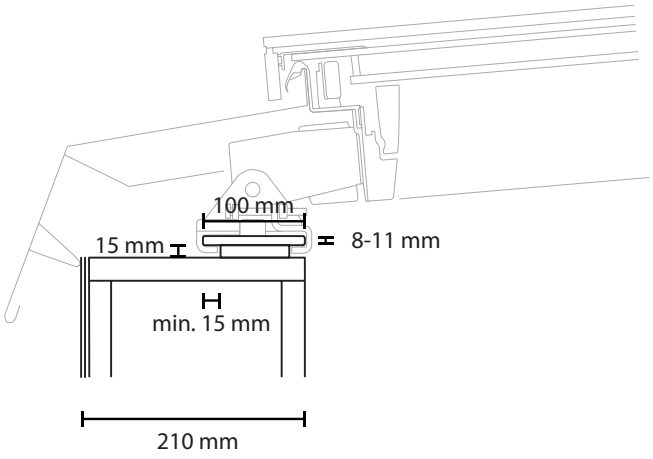

Steel or wood sub-construction with steel flat bar

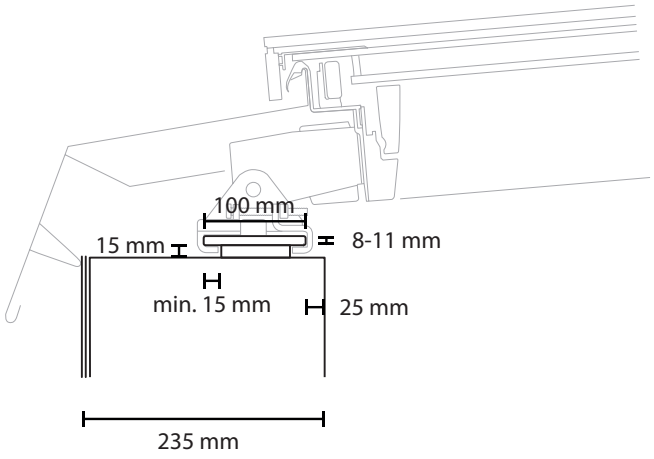

Concrete sub-construction with steel flat bar

Straightness of steel flat bar

Requirements to the straightness of the steel profile is maximum 2 mm over any given 2 meters.

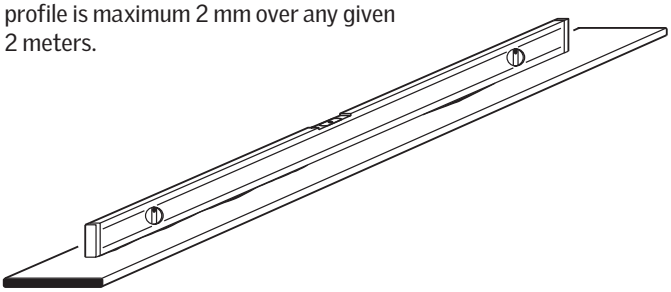

Using wooden battens

The sub-construction for the atrium long-light can also be finished off using a wooden batten on which the bottom shoes of the modular skylight can be secured directly, without using the supplied installation clamps.

The skylight modules are mounted on the batten using screws through the bottom shoes. These screws are not included in the VELUX delivery, and the correct dimensions must be ensured by the customer. There are 4 holes in each shoe, 2 x ø5 and 2 x ø8.5.

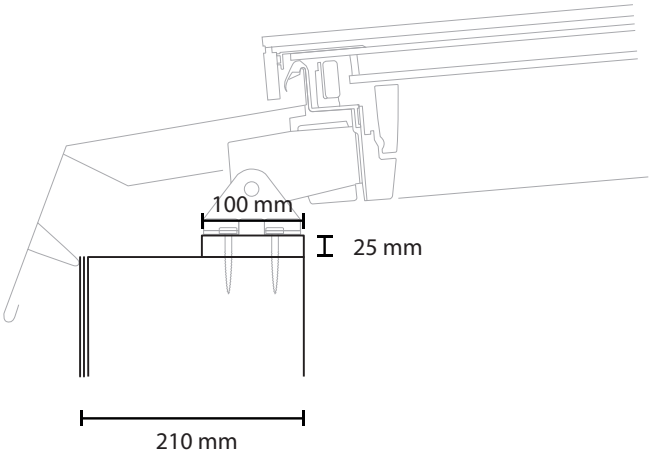

Wood sub-construction with wooden batten

V-455267 © 2011 VELUX GROUP. ® VELUX, THE RED VELUX LOGO AND io-homecontrol ARE REGISTERED TRADEMARKS USED UNDER LICENSE BY THE VELUX GROUP.

VELUX Company Ltd
Woodside Way
Glenrothes
Fife
KY7 4ND
Tel: 01592 778 916
Email: vms@velux.co.uk